Retro-reflective sensors with polarizing filters, in a metal housing

- **Robust die-cast zinc housing**
- **Glass protected optics**
- ***Light reserve warning indicator***
- ***Dual transistor outputs*, NPN or PNP**
- ***Short-circuit protection, reverse polarity protection,* and *power-up output suppression***
- ***Test input* (option)**
- **Connections: Cable, 2 meter**
  Connector, M8
  Connector, Torson, on 20 cm long cable (option)
- **EMC tested according to IEC 801 and EN50081-1/EN 50082-2**

Product designation[1]	**ORP 2NA 100 R1**	**ORP 2NA 500 R1**	**ORP 2PA 100 R1**	**ORP 2PA 500 R1**
Output	NPN (light- and dark-on)		PNP (light- and dark-on)	
Connection	Cable 2 m	Connector M8	Cable 2 m	Connector M8
Range adjustment	Yes			
Optical data [2]				
Range	0,3...3,5 m (retroreflector OZR 001)			
Emitter	Visible-red LED, 660 nm, pulsed, with polarizing filter			
Electrical data [2]				
Supply voltage U_S	10...45 VDC			
Allowable ripple	+/- 10% of U_S			
Current consumption (without load)	< 20 mA			
Max. load current I_L	250 mA			
Residual voltage	< 1,6 V			
Max. switching frequency	1000 Hz			
Environmental data				
Sealing	IP 67			
Temperature T_A (operating and storage)	-20...+60 °C			
Weight	ca. 150 g	ca. 85 g	ca. 150 g	ca. 85 g

Option [1]			
Test input: emitter on	+ U_S or open		
emitter off	< 1,5 V	< U_S - 8 V	

1) For product designation of sensors with options see designation code on page 67.
2) When not otherwise noted, all technical data at T_A = 25 °C and U_S = 24 V.

Retro-reflector ●	Range	Retro-reflector ▬	Range	Retro-reflective tape	Range
OZR 001	0.30 – 3.5 m	OZR 101	0.15 – 5.0 m	OZR 201	0 m
OZR 002	0.15 – 3.4 m	OZR 102	0.20 – 1.9 m	OZR 202	0 m
OZR 003	0.25 – 1.4 m	OZR 103	0.15 – 4.8 m	OZR 203	0.35 – 1.7 m
		OZR 104	0.15 – 7.6 m	OZR 204*	0.35 – 1.3 m
				OZR 205*	0.35 – 1.7 m

* 30 cm long

JAXXEN incorporated
243 Naugatuck Ave.Milford, CT 06460 P.203-878-0400 F.203-878-0458
www.jaxxeninc.com info@jaxxeninc.com

10...45 VDC

NPN / PNP
light-on and
dark-on output

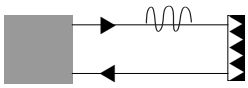

up to 7,6 m

ORP

Dimensions (50 mm x 44,5 mm x 12 mm)

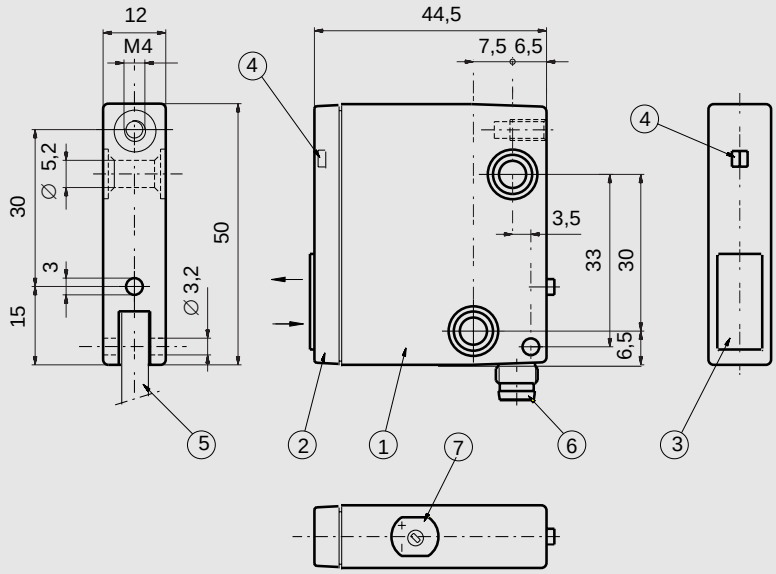

① Housing
② Lens/filter
③ Glass cover
④ Function indicator
⑤ Cable
⑥ Connector M8
⑦ Range adjustment

Optical diagrams

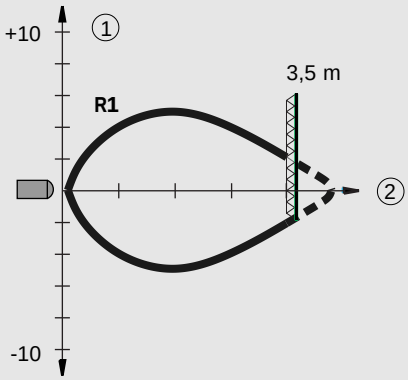

Typical beam diameter
(with retroreflector OZR 001)
① Diameter in (cm)
② Range in (m)

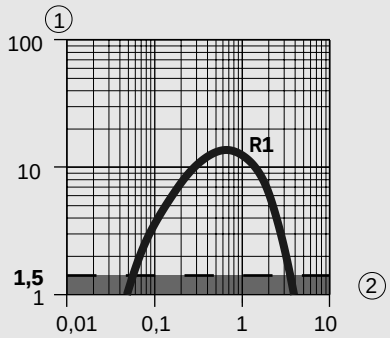

Typical excess gain curve
(with retroreflector OZR 001)
① Gain factor
② Range in (m)

Wiring diagram

NPN-output

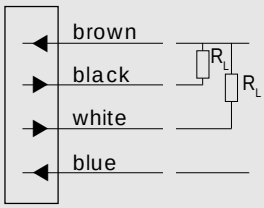

⊕ Supply voltage 10...45 V
Light-on output
Dark-on output
⊖ Supply voltage

PNP-output

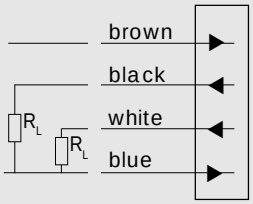

Connector M8

Connector Torson

Connection for connector M8	Wire color	Connection for test input
1	brown	Supply+
2	white	Test input
3	blue	Supply-
4	black	Output

Light-on output:
Output energized when no object is present.

Dark-on output:
Output energized when object is present.

JAXXEN incorporated 243 Naugatuck Ave.Milford, CT 06460 P.203-878-0400 F.203-878-0458
www.jaxxeninc.com info@jaxxeninc.com