Diffuse-reflective sensors, range 5/10 cm, with background suppression, in a metal housing

- **Robust die-cast zinc housing**
- ***Background suppression***
- ***Light reserve warning indicator***
- ***Dual transistor outputs,* NPN or PNP**
- ***Short-circuit protection, reverse polarity protection,* and *power-up output suppression***
- **1000 Hz switching frequency**
- **Connections: Cable, 2 meter**
  Connector, M8
  Connector, Torson, on 20 cm long cable (option)
- **EMC tested according to IEC 801 and EN50081-1/EN 50082-2**

Product designation[1]	**ORT 2NA 100 I1**	**ORT 2NA 500 I1**	**ORT 2PA 100 I1**	**ORT 2PA 500 I1**	**ORT 2NA 100 I2**	**ORT 2NA 500 I2**	**ORT 2PA 100 I2**	**ORT 2PA 500 I2**
Output	NPN (light-/dark-on)		PNP (light-/dark-on)		NPN (light-/dark-on)		PNP (light-/dark-on)	
Connection	Cable 2 m	Connector M8	Cable 2 m	Connector M8	Cable 2 m	Connector M8	Cable 2 m	Connector M8
Range adjustment	Yes							
Optical data [2]								
Max. *range*	5 cm (Kodak card white, 10 x 10 cm)				10 cm (Kodak card white, 10 x 10 cm)			
Emitter	Infrared-LED, 880 nm, pulsed							
Electrical data [2]								
Supply voltage U_S	10...45 VDC							
Allowable ripple	+/- 10% of U_S							
Current consumption (without load)	< 20 mA							
Max. load current I_L	250 mA							
Residual voltage	< 1,6 V							
Max. switching frequency	1000 Hz							
Environmental data								
Sealing	IP 67							
Temperature T_A (operating and storage)	-20...+60 ^{0}C							
Weight	ca. 150 g	ca. 85 g	ca. 150 g	ca. 85 g	ca. 150 g	ca. 85 g	ca. 150 g	ca. 85 g

1) For product designation of sensors with options see designation code on page 67.
2) When not otherwise noted, all technical data at T_A = 25 ^{0}C and U_S = 24 V.

JAXXEN incorporated
243 Naugatuck Ave.Milford, CT 06460 P.203-878-0400 F.203-878-0458
www.jaxxeninc.com info@jaxxeninc.com

10...45 VDC

NPN / PNP
light-on and
dark-on output

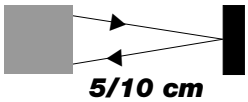

5/10 cm

ORT

Dimensions (50 mm x 44,5 mm x 12 mm)

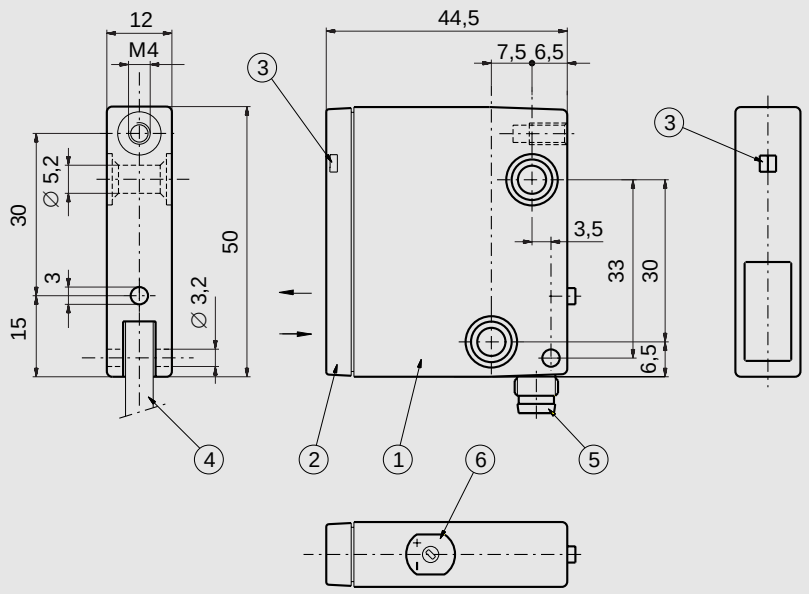

① Housing
② Lens/filter
③ Function indicator
④ Cable
⑤ Connector M8
⑥ Range adjustment

Optical diagrams

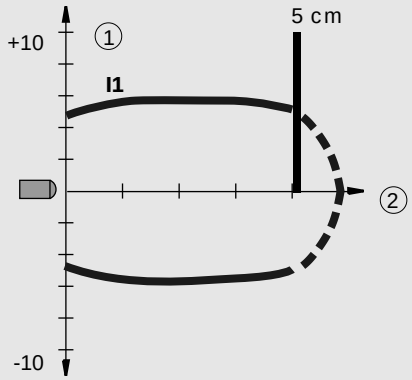

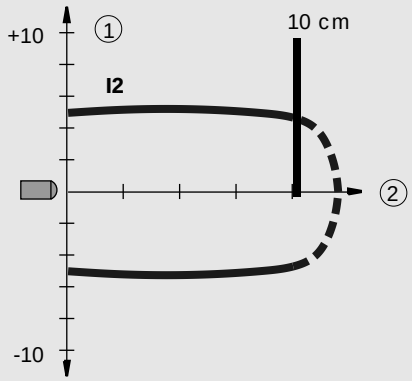

Typical beam diameter
(with Kodak card white, 10 x 10 cm)
① Diameter in (cm)
② Range in (cm)

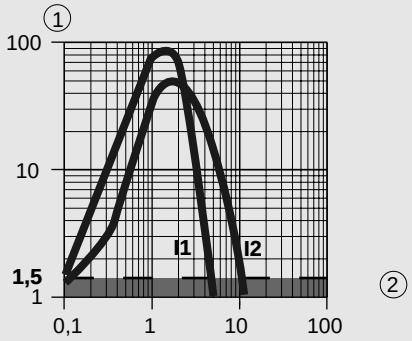

Typical excess gain curve
(with Kodak card white, 10 x 10 cm)
① Gain factor
② Range in (cm)

Wiring diagram

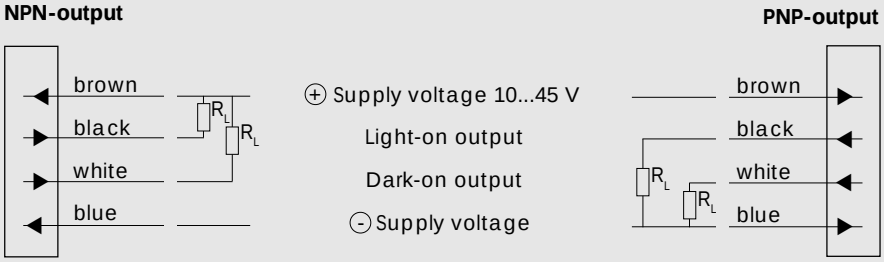

Connector M8

Connector Torson

Connection for connector M8	Wire color
1	brown
2	white
3	blue
4	black

Light-on output:
Output energized when object is present.

Dark-on output:
Output energized when no object is present.

JAXXEN incorporated 243 Naugatuck Ave.Milford, CT 06460 P.203-878-0400 F.203-878-0458
www.jaxxeninc.com info@jaxxeninc.com

Diffuse-reflective sensors, range 20/40 cm, in a metal housing

- **Robust die-cast zinc housing**
- ***Light reserve warning indicator***
- ***Dual transistor outputs,* NPN or PNP**
- ***Short-circuit protection, reverse polarity protection*, and *power-up output suppression***
- **1000 Hz switching frequency**
- **Connections: Cable, 2 meter**
  Connector, M8
  Connector, Torson, on 20 cm long cable (option)
- **EMC tested according to IEC 801 and EN50081-1/EN 50082-2**

Product designation[1]	**ORT 2NA 100 I3**	**ORT 2NA 500 I3**	**ORT 2PA 100 I3**	**ORT 2PA 500 I3**	**ORT 2NA 100 I4**	**ORT 2NA 500 I4**	**ORT 2PA 100 I4**	**ORT 2PA 500 I4**
Output	NPN (light-/dark-on)		PNP (light-/dark-on)		NPN (light-/dark-on)		PNP (light-/dark-on)	
Connection	Cable 2 m	Connector M8	Cable 2 m	Connector M8	Cable 2 m	Connector M8	Cable 2 m	Connector M8
Range adjustment	Yes							
Optical data [2]								
Max. *range*	20 cm (Kodak card white, 10 x 10 cm)				40 cm (Kodak card white, 10 x 10 cm)			
Emitter	Infrared-LED, 880 nm, pulsed							
Electrical data [2]								
Supply voltage U_S	10...45 VDC							
Allowable ripple	+/- 10% of U_S							
Current consumption (without load)	< 20 mA							
Max. load current I_L	250 mA							
Residual voltage	< 1,6 V							
Max. switching frequency	1000 Hz							
Environmental data								
Sealing	IP 67							
Temperature T_A (operating and storage)	-20...+60 ^{0}C							
Weight	ca. 150 g	ca. 85 g	ca. 150 g	ca. 85 g	ca. 150 g	ca. 85 g	ca. 150 g	ca. 85 g

1) For product designation of sensors with options see designation code on page 67.
2) When not otherwise noted, all technical data at T_A = 25 ^{0}C and U_S = 24 V.

JAXXEN incorporated
243 Naugatuck Ave.Milford, CT 06460 P.203-878-0400 F.203-878-0458
www.jaxxeninc.com info@jaxxeninc.com

10...45 VDC

NPN / PNP
light-on and
dark-on output

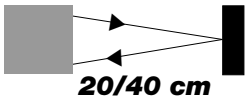

20/40 cm

ORT

Dimensions (50 mm x 44,5 mm x 12 mm)

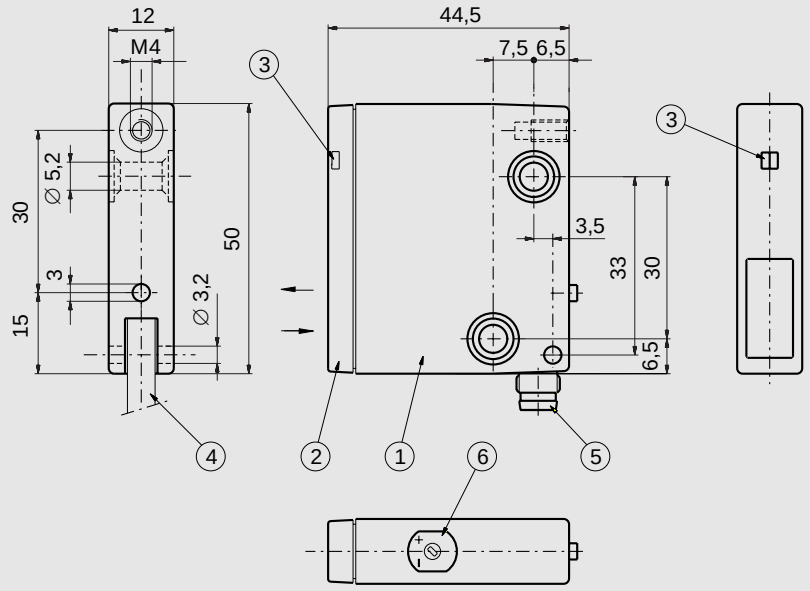

① Housing
② Lens/filter
③ Function indicator
④ Cable
⑤ Connector M8
⑥ Range adjustment

Optical diagrams

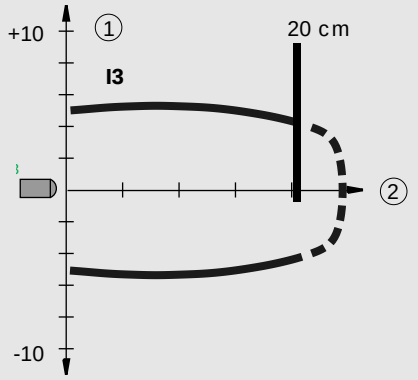

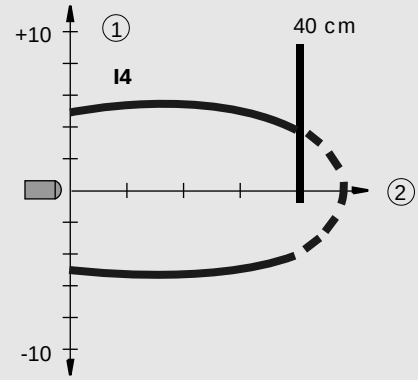

Typical beam diameter
(with Kodak card white, 10 x 10 cm)
① Diameter in (cm)
② Range in (cm)

Wiring diagram

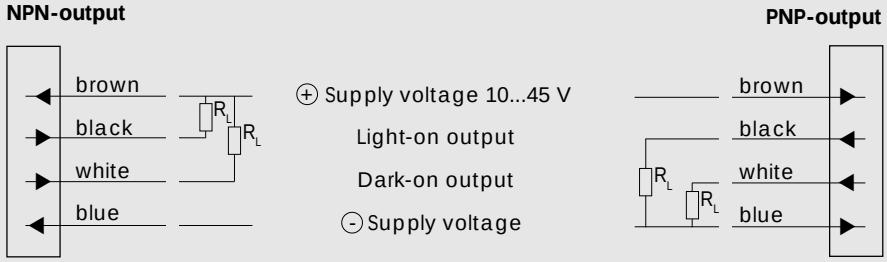

Connector M8

Connector Torson

Connection for connector M8	Wire color
1	brown
2	white
3	blue
4	black

Light-on output:
Output energized when object is present.

Dark-on output:
Output energized when no object is present.

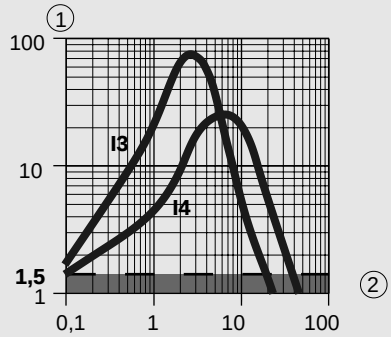

Typical excess gain curve
(with Kodak card white, 10 x 10 cm)
① Gain factor
② Range in (cm)

JAXXEN incorporated 243 Naugatuck Ave.Milford, CT 06460 P.203-878-0400 F.203-878-0458
www.jaxxeninc.com info@jaxxeninc.com